POOLPAK

PoolComPak
Series AWH/HCDH 0550/0800/1200
Dimensional Drawings

Packaged Natatorium Environment Control System

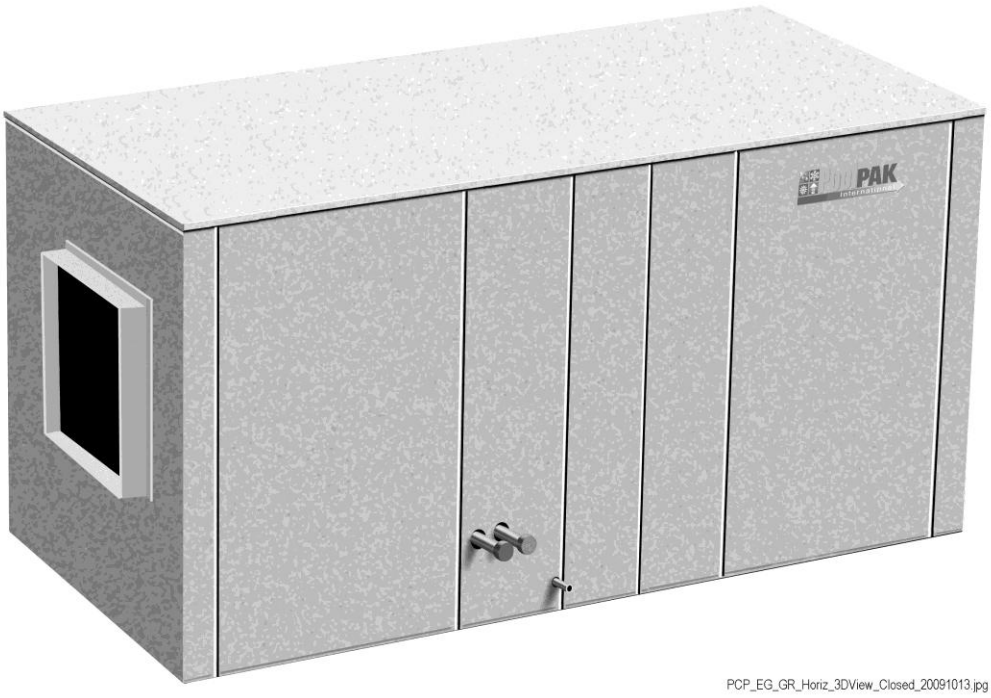

PCP_EG_GR_Horiz_3DView_Closed_20091013.jpg

PoolComPak ™ Series (PCP)

Natatorium Dehumidification Unit

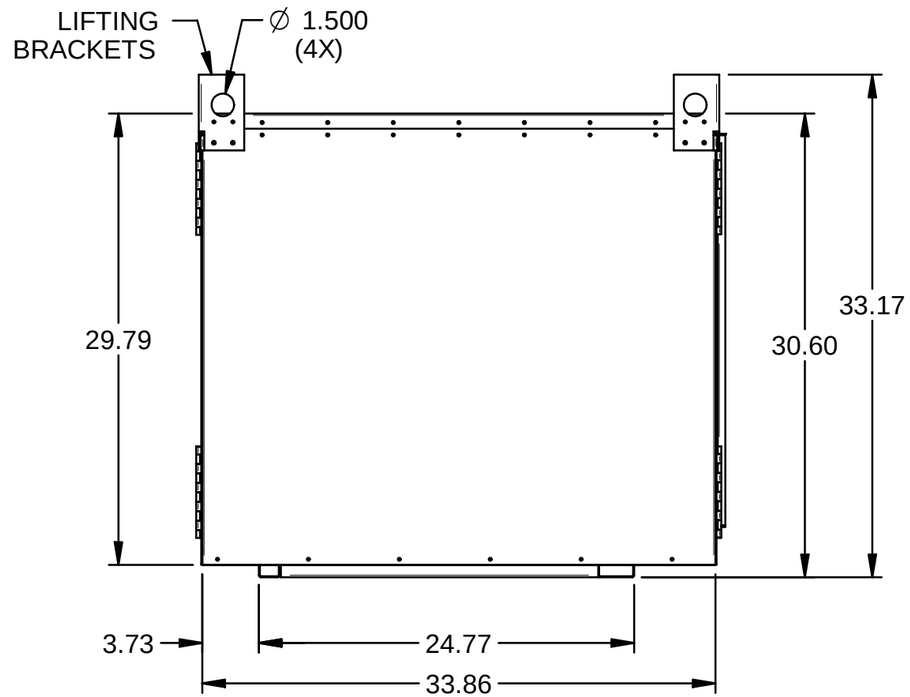

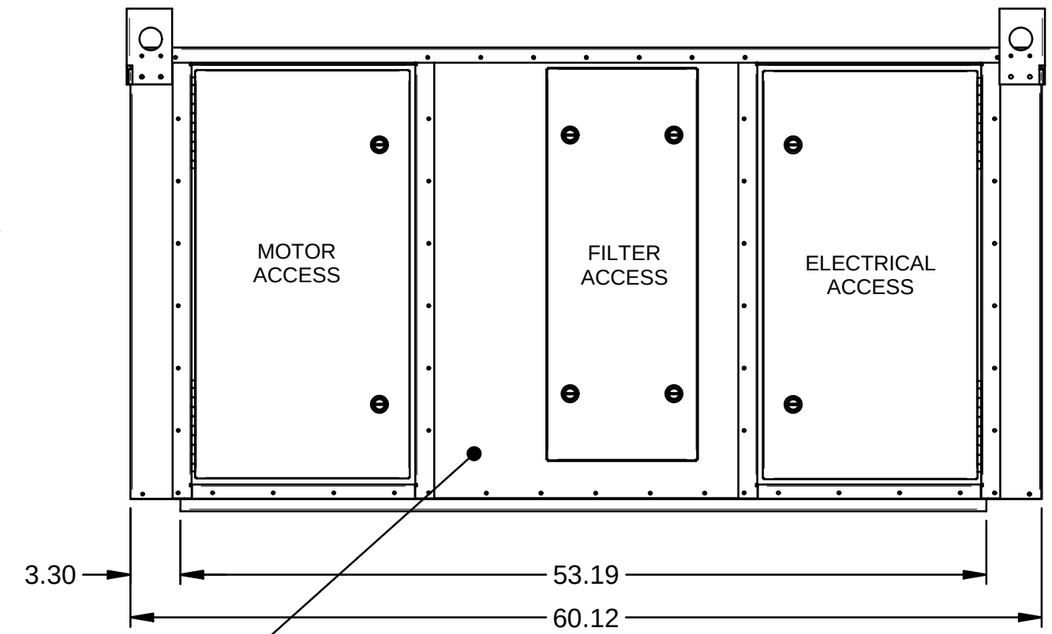

OVERALL DIMENSIONS

PIPING CONNECTION PANEL:
B
1"MPT POOL WATER;
1"MPT WCC;
1/2"MPT CONDENSATE;
5/8"ODS-ACC VAPOR;
1/2"ODS-ACC LIQUID (550) /
5/8"ODS-ACC LIQUID (800/1200); &
3/4"MPT-1R HWC OR 1"MPT-2R HWC
(IF APPLICABLE).

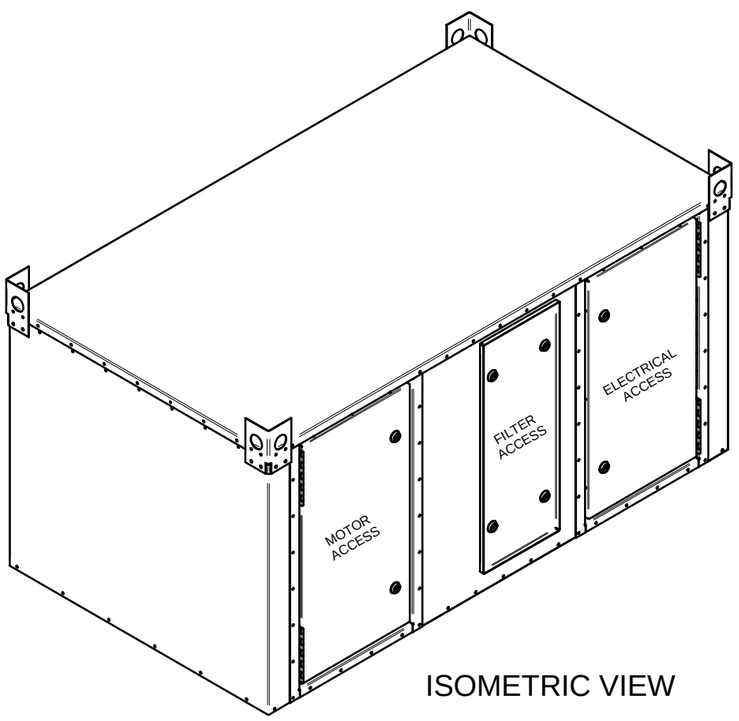

ISOMETRIC VIEW

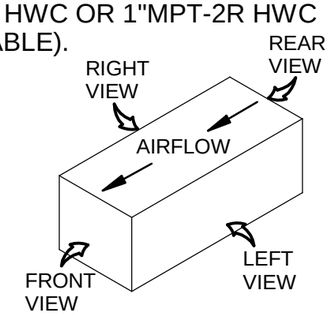

DIMENSIONS ARE IN 'INCHES'
WEIGHTS ARE IN 'POUNDS'

AIR FILTERS			
Location	**Qty.**	**Size**	**P/N**
Return (1")	1	24" x 30"	26-0090-12
Return (2")	1	24" x 30"	26-0090-14
Outside Air 0-450 CFM	1	12" x 12"	26-0090-1
Outside Air 451-800 CFM	2	12" x 12"	26-0090-1
Return - 1" STD, 2" Optional			
Outside Air - 1" ONLY			

POOLPAK INTERNATIONAL YORK, PA

DESCR: DIAGRAM, AWH/HCDH-550/800/1200 (HORIZONTAL)
R410A
TITLE BLOCK FOR INTERNAL USE ONLY 1 OF 11

ESTIMATED WEIGHTS			
	550	**800**	**1200**
AWH	480	510	550
HCDH	465	495	535

B

UNIT(S) USED: AWH/HCDH-550/800/1200
FILE: 5600005.dft
DR: dhenry CHK: REV. B PART NO. 560-0005D
DATE: 8/14/2009

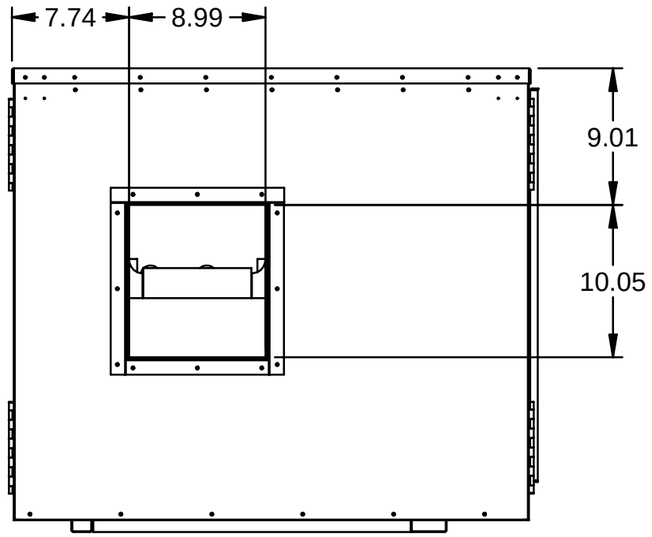

FRONT SUPPLY - (9X7 CW) - (SA-FC01)

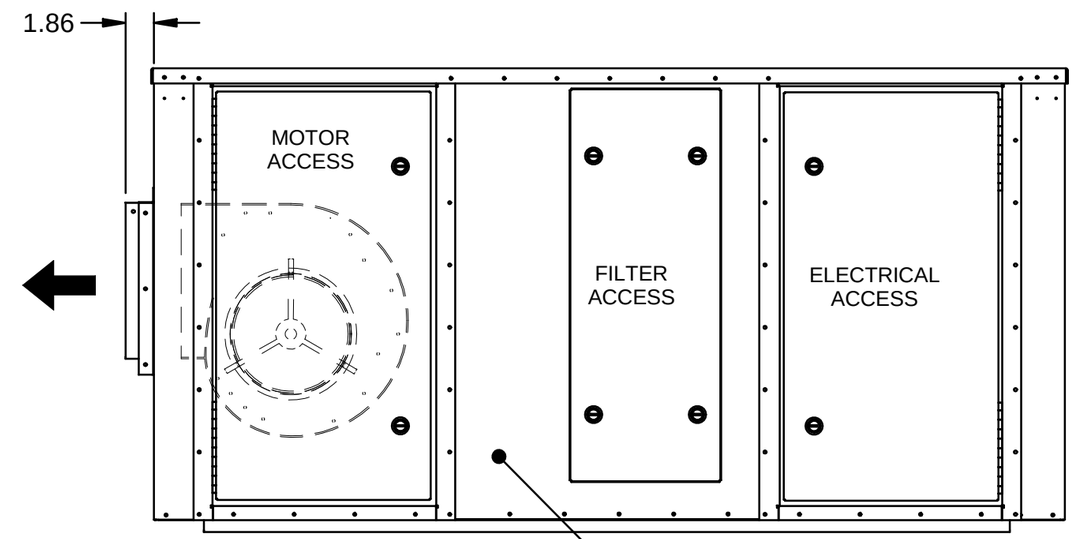

FRONT SUPPLY - (9X7 CW) - (SA-FC01)

B

PIPING CONNECTION PANEL:
1"MPT POOL WATER;
1"MPT WCC;
1/2"MPT CONDENSATE;
5/8"ODS-ACC VAPOR;
1/2"ODS-ACC LIQUID (550) /
5/8"ODS-ACC LIQUID (800/1200); &
3/4"MPT-1R HWC OR 1"MPT-2R HWC
(IF APPLICABLE).

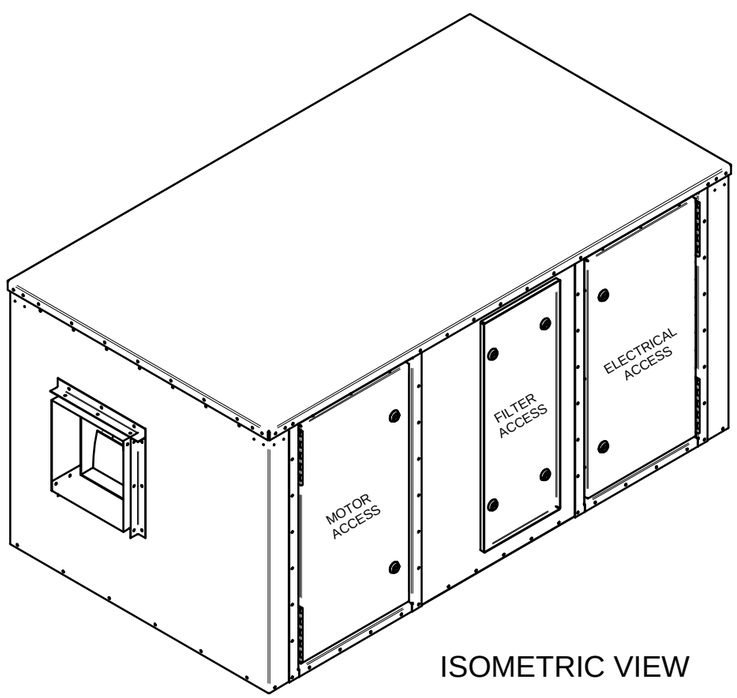

ISOMETRIC VIEW

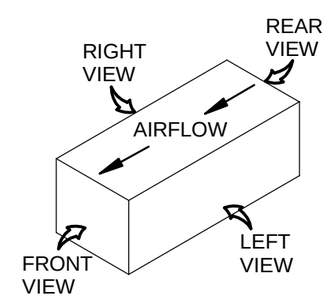

DIMENSIONS ARE IN 'INCHES'
WEIGHTS ARE IN 'POUNDS'

POOLPAK INTERNATIONAL YORK, PA

DESCR: DIAGRAM, AWH/HCDH-550/800/1200 (HORIZONTAL)
R410A
TITLE BLOCK FOR INTERNAL USE ONLY

ESTIMATED WEIGHTS			
	550	800	1200
AWH	480	510	550
HCDH	465	495	535

B

UNIT(S) USED: AWH/HCDH-550/800/1200
FILE: 5600005.dft
DR: dhenry
CHK:
REV. B
PART NO. 560-0005D
DATE: 8/14/2009

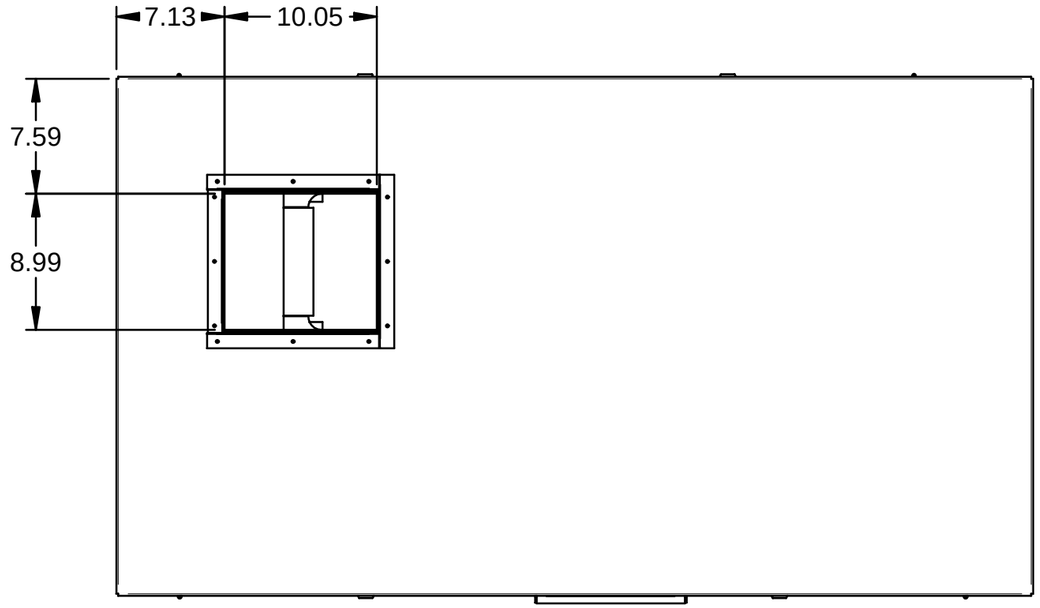

TOP SUPPLY - (9X7 CW) - (SA-TC07)

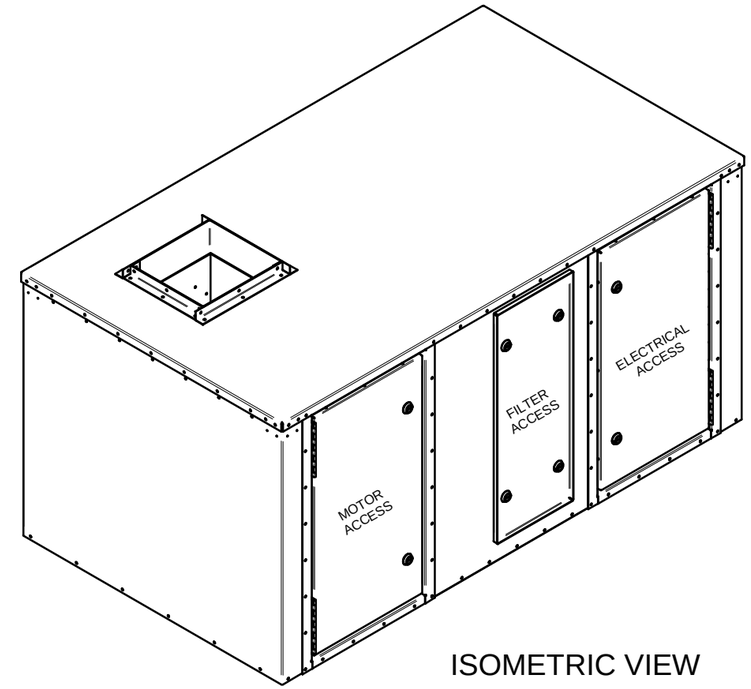

ISOMETRIC VIEW

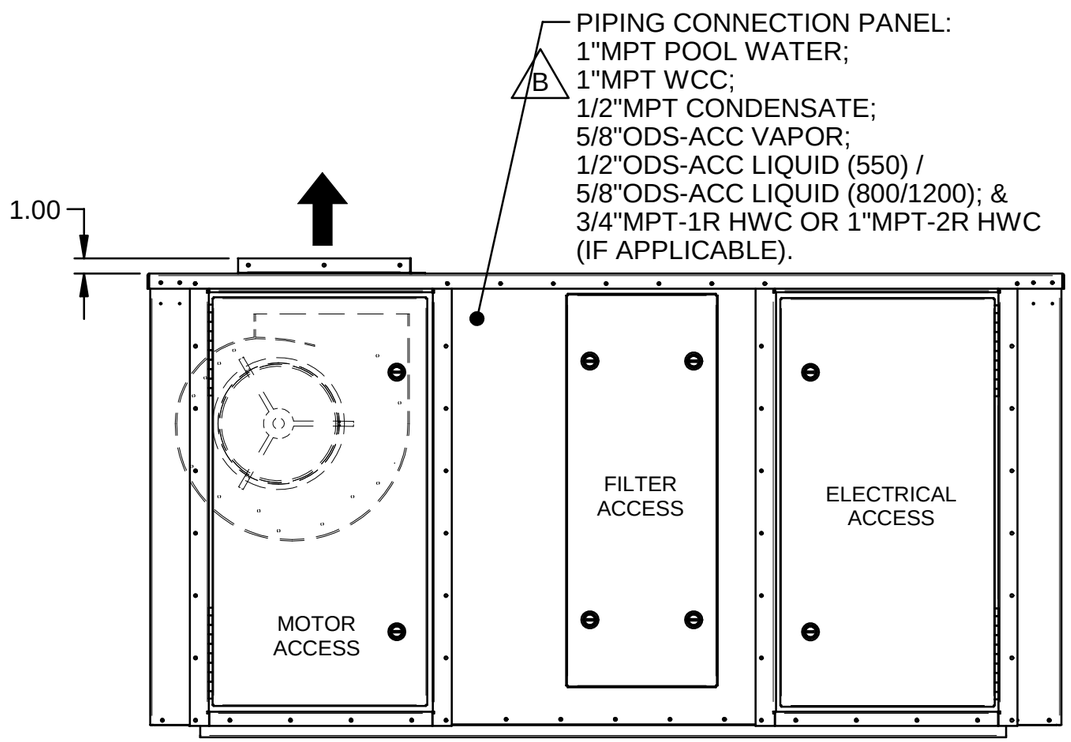

TOP SUPPLY - (9X7 CW) - (SA-TC07)

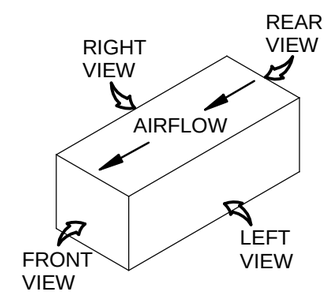

DIMENSIONS ARE IN 'INCHES'
WEIGHTS ARE IN 'POUNDS'

POOLPAK INTERNATIONAL YORK, PA

DESCR: DIAGRAM, AWH/HCDH-550/800/1200 (HORIZONTAL)
R410A
TITLE BLOCK FOR INTERNAL USE ONLY

3 OF 11

ESTIMATED WEIGHTS			
	550	800	1200
AWH	480	510	550
HCDH	465	495	535

B

UNIT(S) USED: AWH/HCDH-550/800/1200
FILE: 5600005.dft
DR: dhenry
CHK:
REV. B
PART NO. 560-0005D
DATE: 8/14/2009

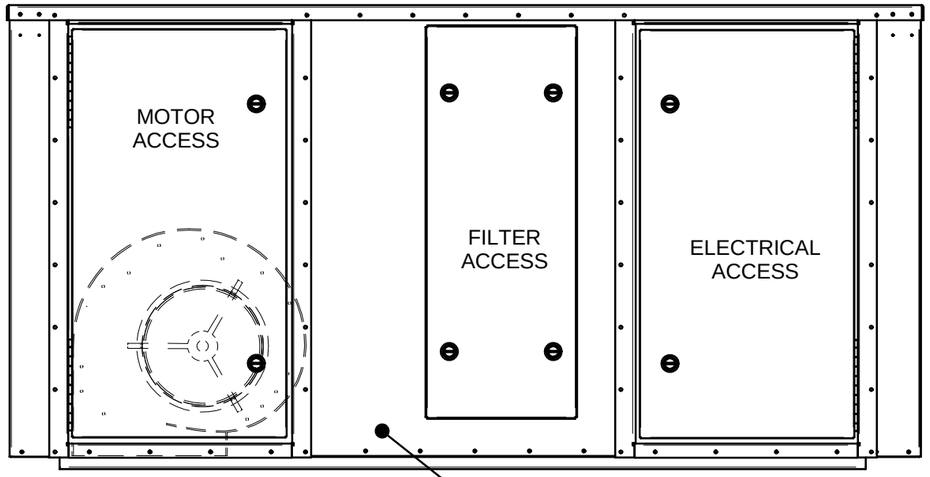

BOTTOM SUPPLY - (9X7 CW) - (SA-BC03)

PIPING CONNECTION PANEL:
1"MPT POOL WATER;
1"MPT WCC;
1/2"MPT CONDENSATE;
5/8"ODS-ACC VAPOR;
1/2"ODS-ACC LIQUID (550) /
5/8"ODS-ACC LIQUID (800/1200); &
3/4"MPT-1R HWC OR 1"MPT-2R HWC
(IF APPLICABLE).

B

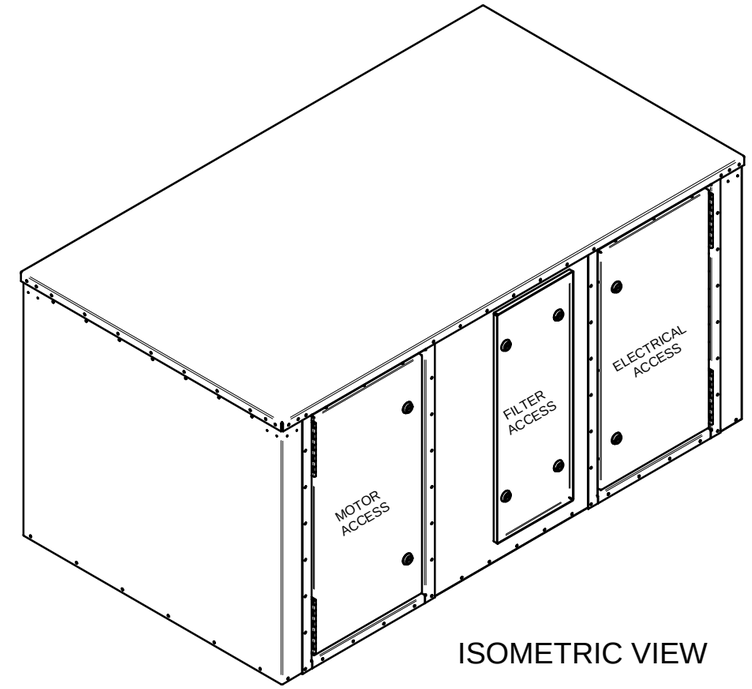

ISOMETRIC VIEW

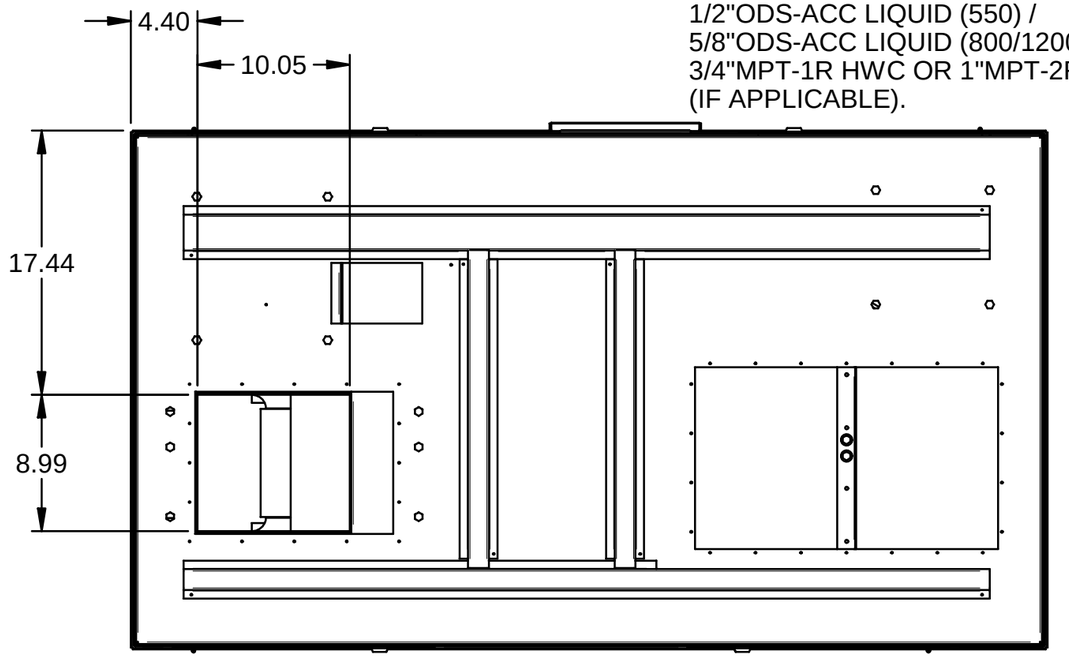

BOTTOM SUPPLY - (9X7 CW) - (SA-BC03)

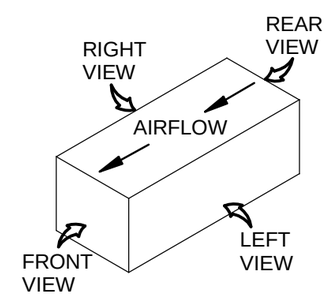

DIMENSIONS ARE IN 'INCHES'
WEIGHTS ARE IN 'POUNDS'

POOLPAK INTERNATIONAL YORK, PA

DESCR: DIAGRAM, AWH/HCDH-550/800/1200 (HORIZONTAL)
R410A
TITLE BLOCK FOR INTERNAL USE ONLY 4 OF 11

ESTIMATED WEIGHTS			
	550	800	1200
AWH	480	510	550
HCDH	465	495	535

B

UNIT(S) USED: AWH/HCDH-550/800/1200
FILE: 5600005.dft
DR: dhenry CHK: REV. B PART NO. 560-0005D
DATE: 8/14/2009

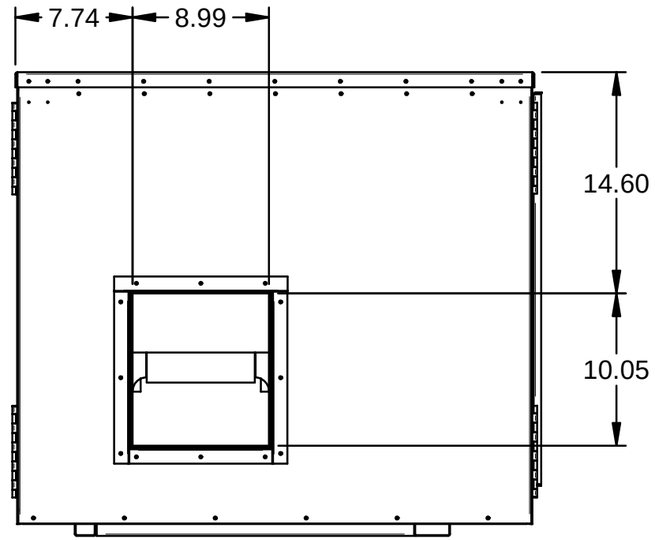

FRONT SUPPLY - (9X7 CCW) - (SA-FC02)

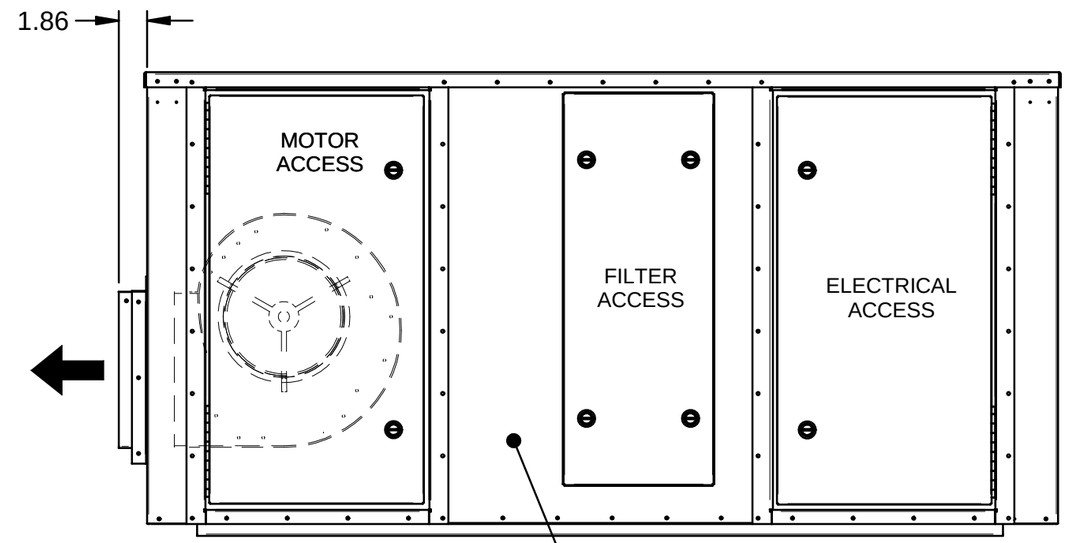

FRONT SUPPLY - (9X7 CCW) - (SA-FC02)

B

PIPING CONNECTION PANEL:
1"MPT POOL WATER;
1"MPT WCC;
1/2"MPT CONDENSATE;
5/8"ODS-ACC VAPOR;
1/2"ODS-ACC LIQUID (550) /
5/8"ODS-ACC LIQUID (800/1200); &
3/4"MPT-1R HWC OR 1"MPT-2R HWC
(IF APPLICABLE).

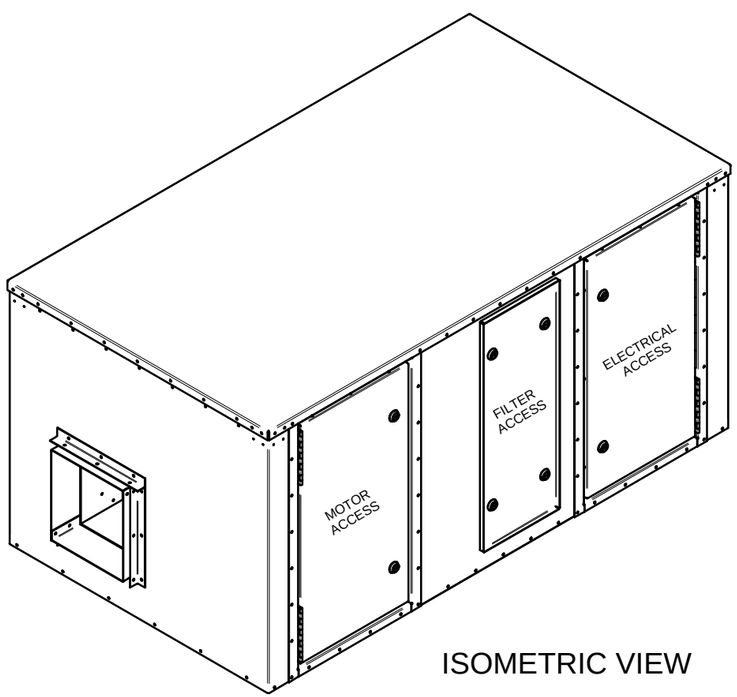

ISOMETRIC VIEW

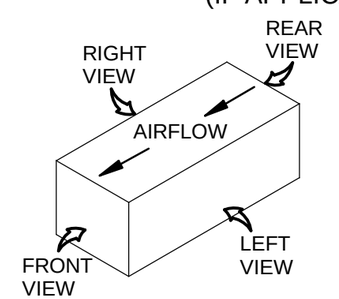

DIMENSIONS ARE IN 'INCHES'
WEIGHTS ARE IN 'POUNDS'

POOLPAK INTERNATIONAL YORK, PA

DESCR: DIAGRAM, AWH/HCDH-550/800/1200 (HORIZONTAL)
R410A
TITLE BLOCK FOR INTERNAL USE ONLY

ESTIMATED WEIGHTS			
	550	800	1200
AWH	480	510	550
HCDH	465	495	535

B

UNIT(S) USED: AWH/HCDH-550/800/1200
FILE: 5600005.dft
DR: dhenry
CHK:
REV. B
PART NO. 560-0005D
DATE: 8/14/2009

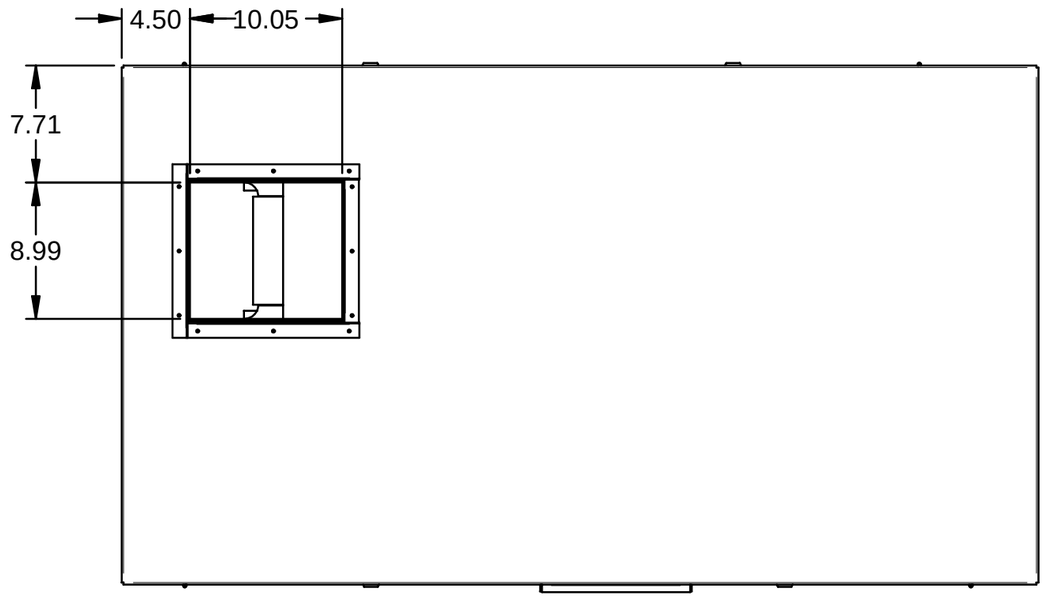

TOP SUPPLY - (9X7 CCW) - (SA-TC08)

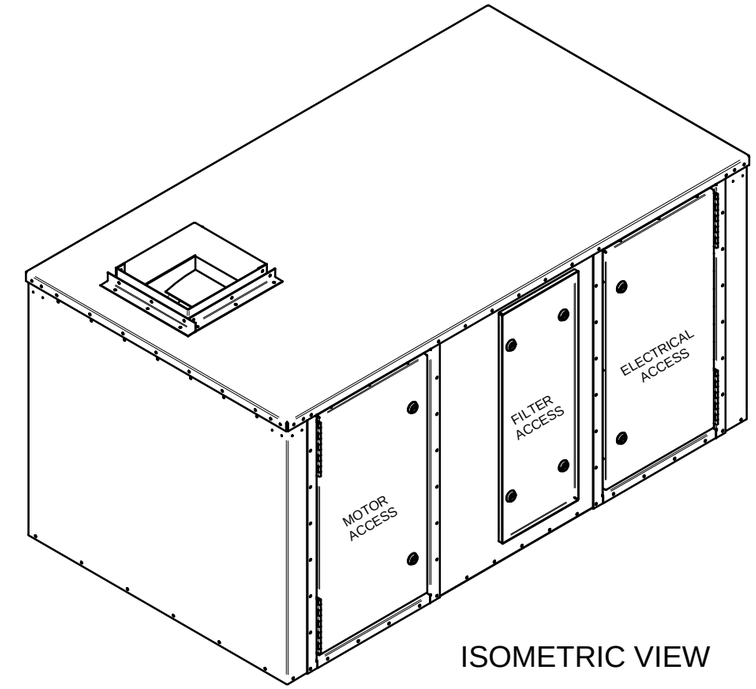

ISOMETRIC VIEW

B

PIPING CONNECTION PANEL:
1"MPT POOL WATER;
1"MPT WCC;
1/2"MPT CONDENSATE;
5/8"ODS-ACC VAPOR;
1/2"ODS-ACC LIQUID (550) /
5/8"ODS-ACC LIQUID (800/1200); &
3/4"MPT-1R HWC OR 1"MPT-2R HWC
(IF APPLICABLE).

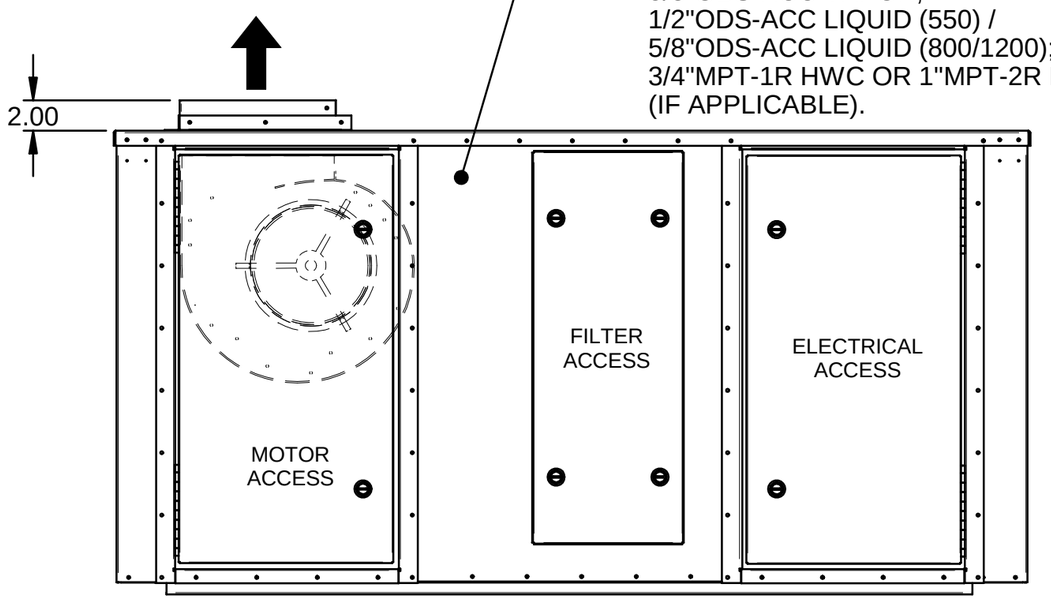

TOP SUPPLY - (9X7 CCW) - (SA-TC08)

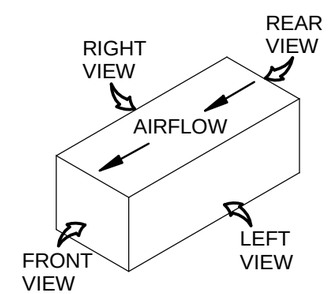

DIMENSIONS ARE IN 'INCHES'
WEIGHTS ARE IN 'POUNDS'

POOLPAK INTERNATIONAL YORK, PA

DESCR: DIAGRAM, AWH/HCDH-550/800/1200 (HORIZONTAL)
R410A
TITLE BLOCK FOR INTERNAL USE ONLY 6 OF 11

ESTIMATED WEIGHTS			
	550	800	1200
AWH	480	510	550
HCDH	465	495	535

B

UNIT(S) USED: AWH/HCDH-550/800/1200
FILE: 5600005.dft
DR: dhenry CHK: REV. B PART NO. 560-0005D
DATE: 8/14/2009

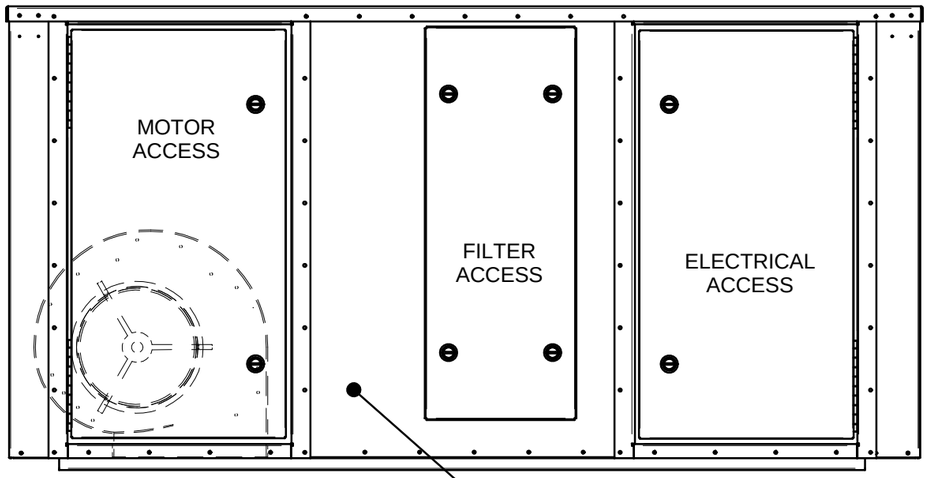

BOTTOM SUPPLY - (9X7 CCW) - (SA-BC04)

B

PIPING CONNECTION PANEL:
1"MPT POOL WATER;
1"MPT WCC;
1/2"MPT CONDENSATE;
5/8"ODS-ACC VAPOR;
1/2"ODS-ACC LIQUID (550) /
5/8"ODS-ACC LIQUID (800/1200); &
3/4"MPT-1R HWC OR 1"MPT-2R HWC
(IF APPLICABLE).

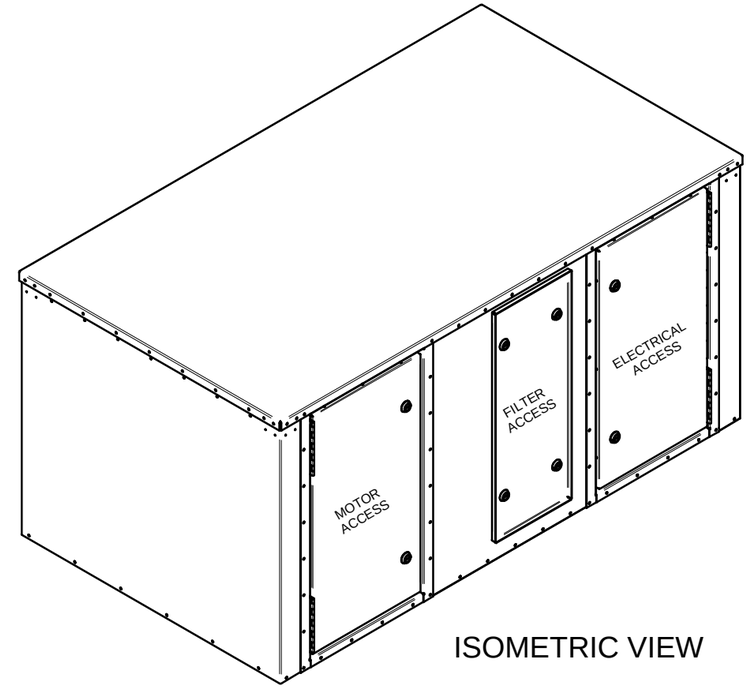

ISOMETRIC VIEW

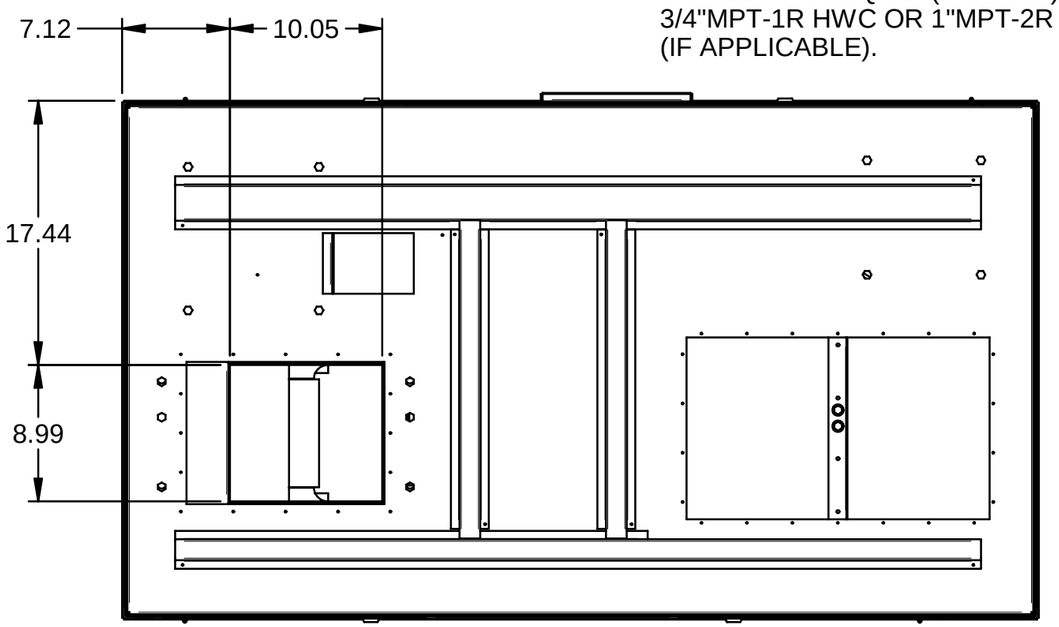

BOTTOM SUPPLY - (9X7 CCW) - (SA-BC04)

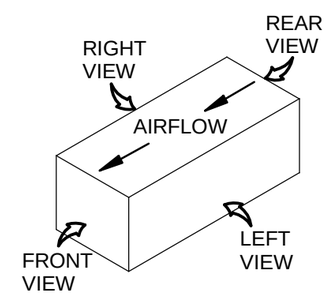

DIMENSIONS ARE IN 'INCHES'
WEIGHTS ARE IN 'POUNDS'

POOLPAK INTERNATIONAL YORK, PA

DESCR: DIAGRAM, AWH/HCDH-550/800/1200 (HORIZONTAL)
R410A
TITLE BLOCK FOR INTERNAL USE ONLY

ESTIMATED WEIGHTS			
	550	800	1200
AWH	480	510	550
HCDH	465	495	535

B

UNIT(S) USED: AWH/HCDH-550/800/1200
FILE: 5600005.dft
DR: dhenry
CHK:
REV. B
PART NO. 560-0005D
DATE: 8/14/2009

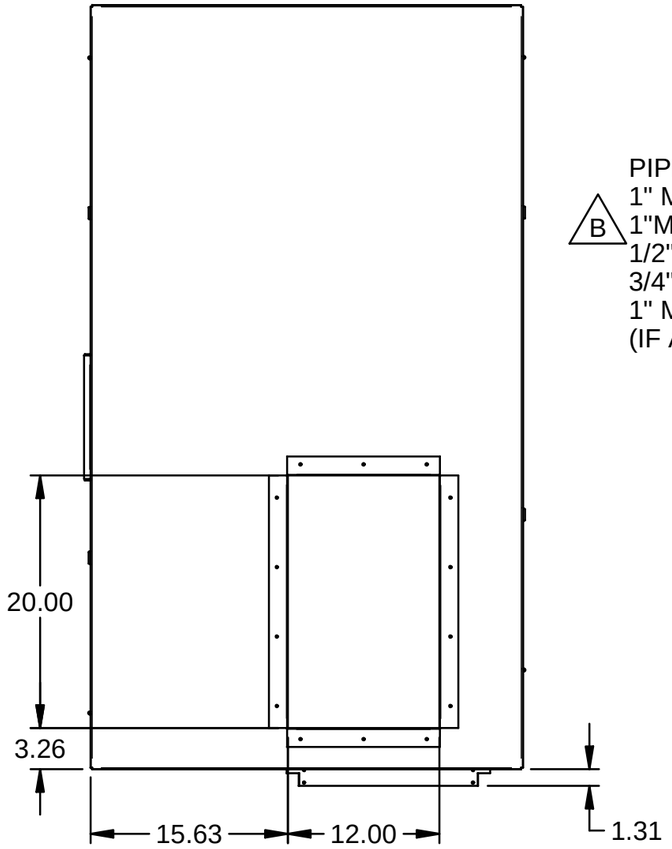

TOP RETURN - (RA-TR)

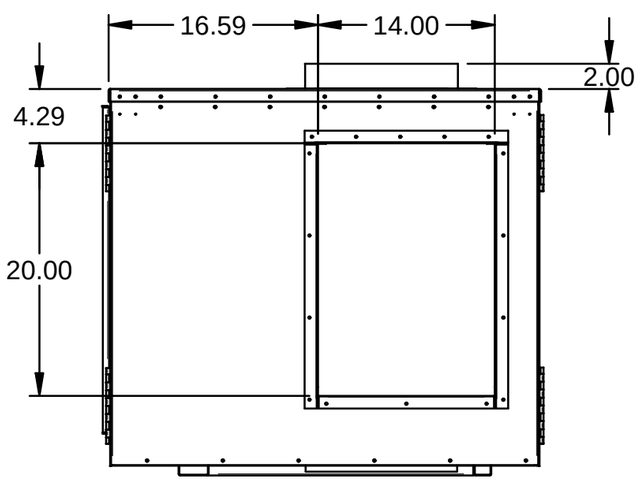

REAR RETURN - (RA-KR)

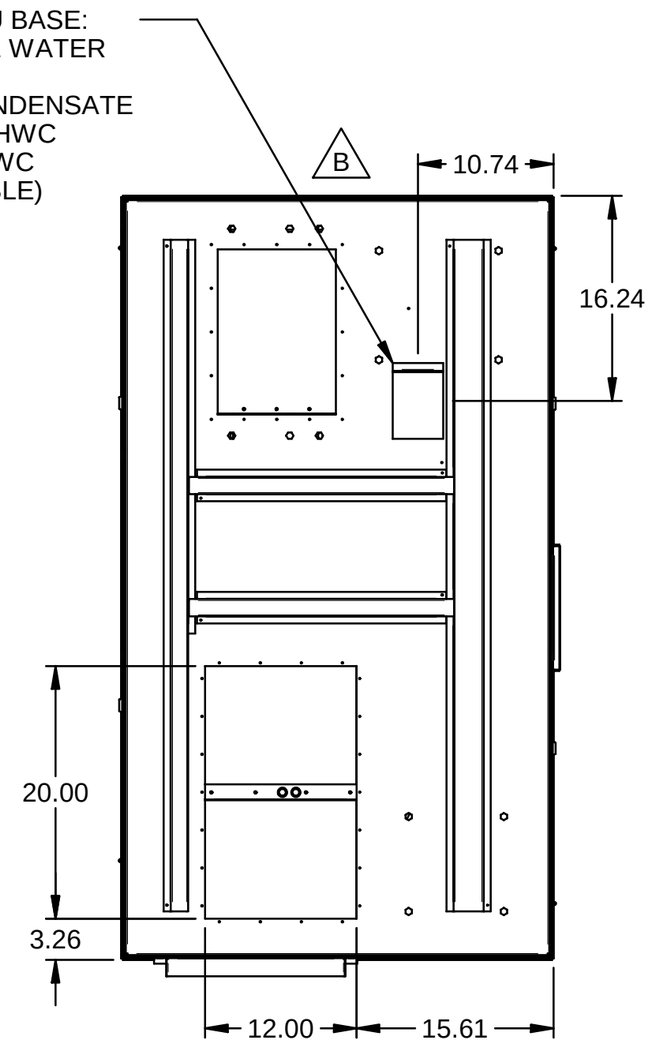

BOTTOM RETURN - (RA-BR)

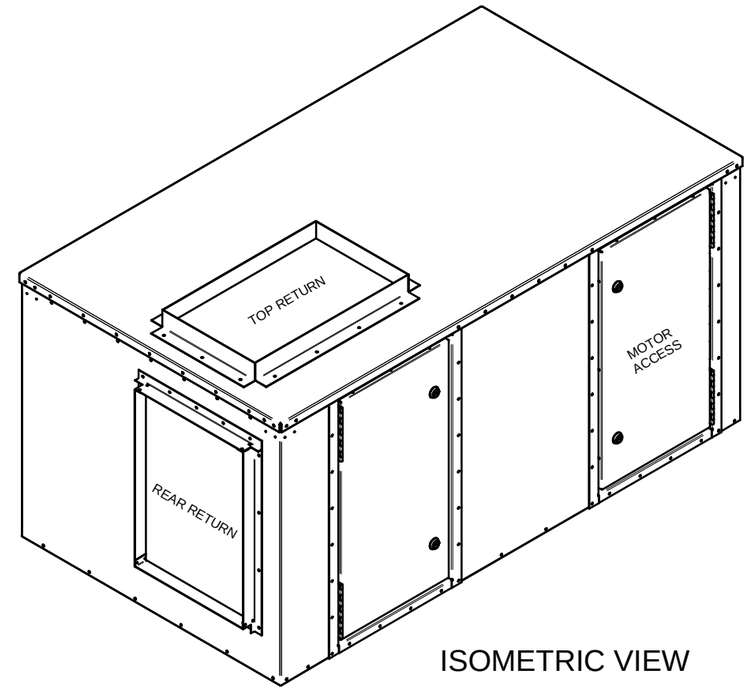

ISOMETRIC VIEW

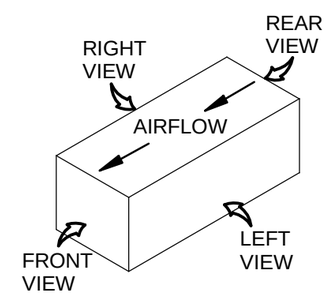

DIMENSIONS ARE IN 'INCHES'
WEIGHTS ARE IN 'POUNDS'

POOLPAK INTERNATIONAL YORK, PA

DESCR: DIAGRAM, AWH/HCDH-550/800/1200 (HORIZONTAL)
R410A
TITLE BLOCK FOR INTERNAL USE ONLY

ESTIMATED WEIGHTS			
	550	800	1200
AWH	480	510	550
HCDH	465	495	535

B

UNIT(S) USED: AWH/HCDH-550/800/1200
FILE: 5600005.dft
DR: dhenry
CHK:
REV. B
PART NO. 560-0005D
DATE: 8/14/2009

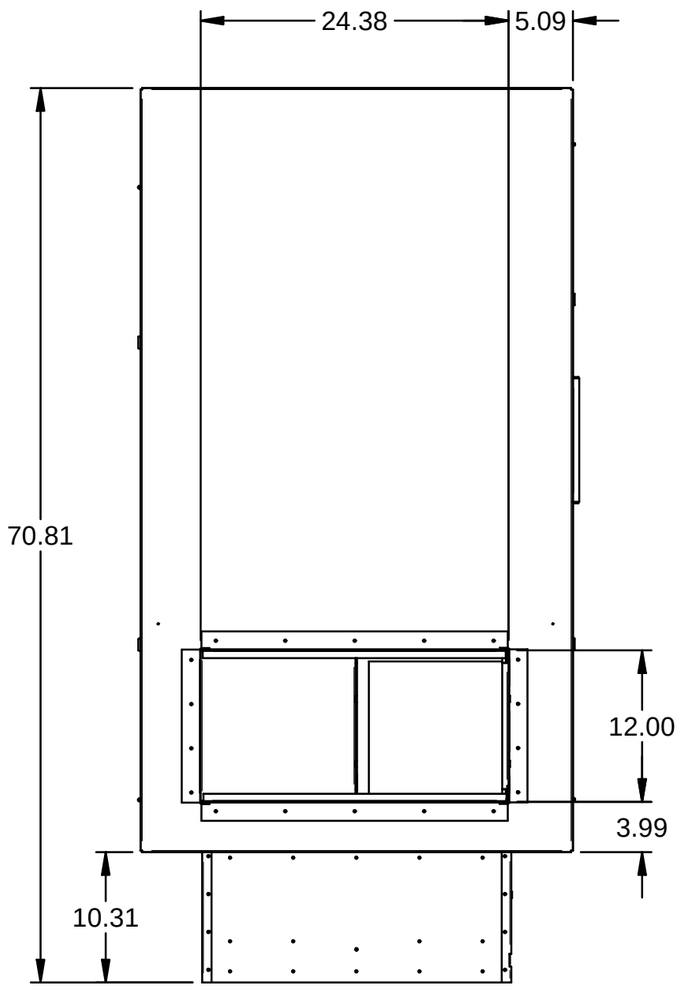

TOP OUTSIDE AIR - (OA-TC)

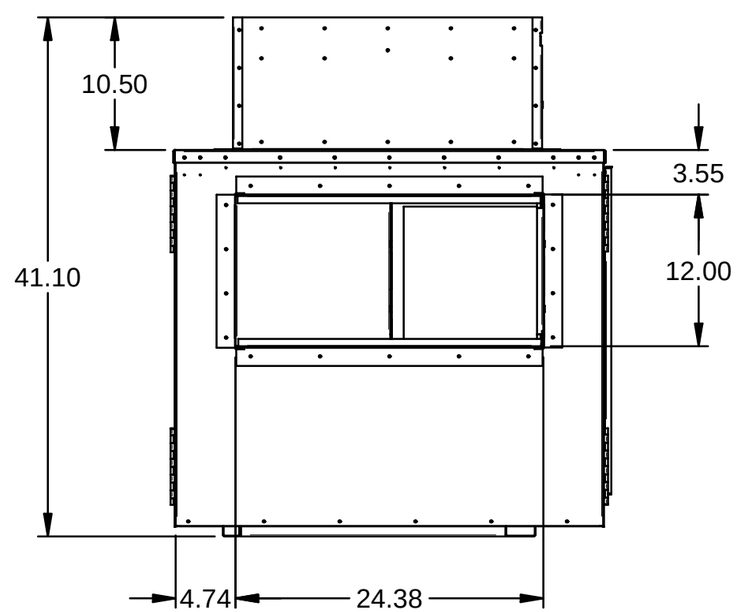

FRONT OUTSIDE AIR - (OA-FC)

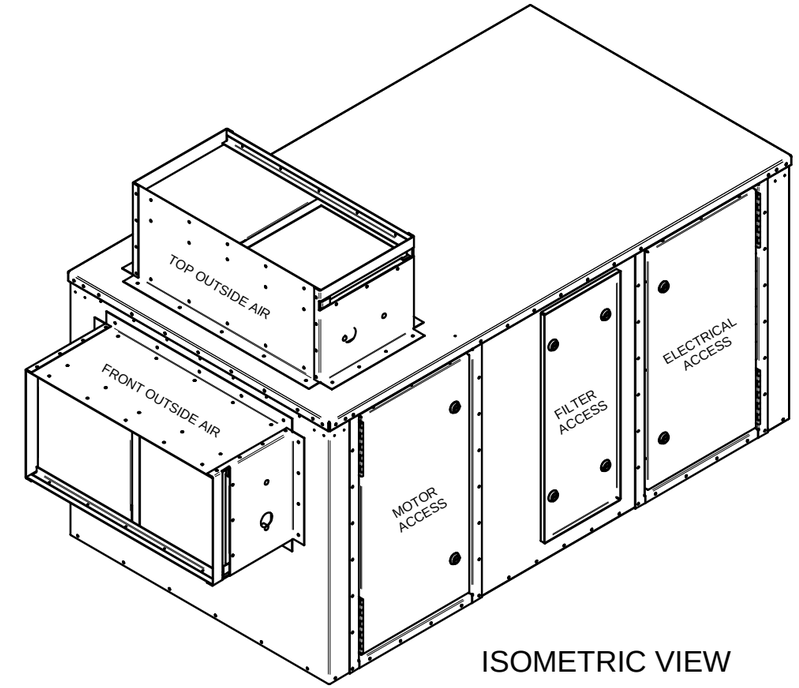

ISOMETRIC VIEW

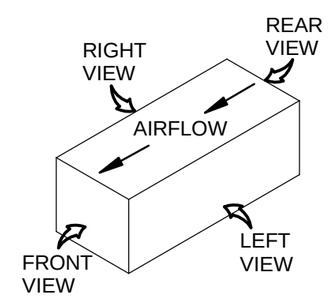

DIMENSIONS ARE IN 'INCHES'
WEIGHTS ARE IN 'POUNDS'

POOLPAK INTERNATIONAL YORK, PA

DESCR: DIAGRAM, AWH/HCDH-550/800/1200 (HORIZONTAL)
R410A
TITLE BLOCK FOR INTERNAL USE ONLY 9 OF 11

ESTIMATED WEIGHTS			
	550	800	1200
AWH	480	510	550
HCDH	465	495	535

B

UNIT(S) USED: AWH/HCDH-550/800/1200
FILE: 5600005.dft
DR: dhenry CHK: REV. B PART NO. 560-0005D
DATE: 8/14/2009

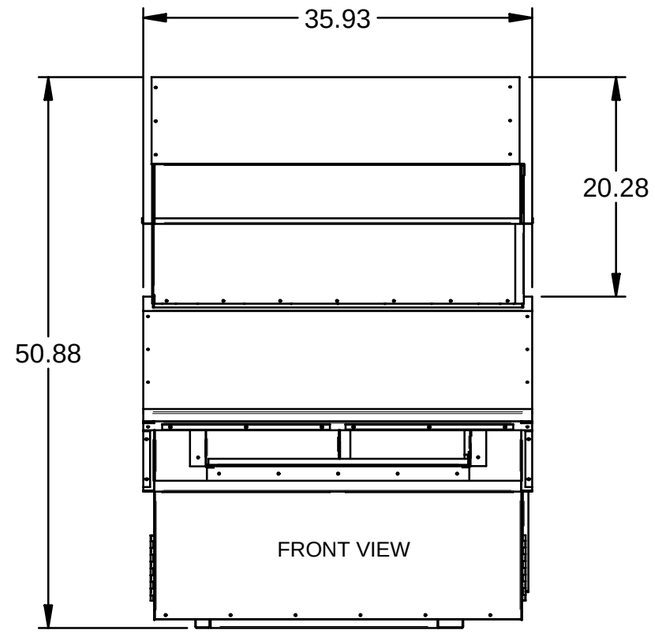

OUTSIDE AIR W/ RAINHOOD - TOP OA (OA-TC) - FRONT OA (OA-FC)

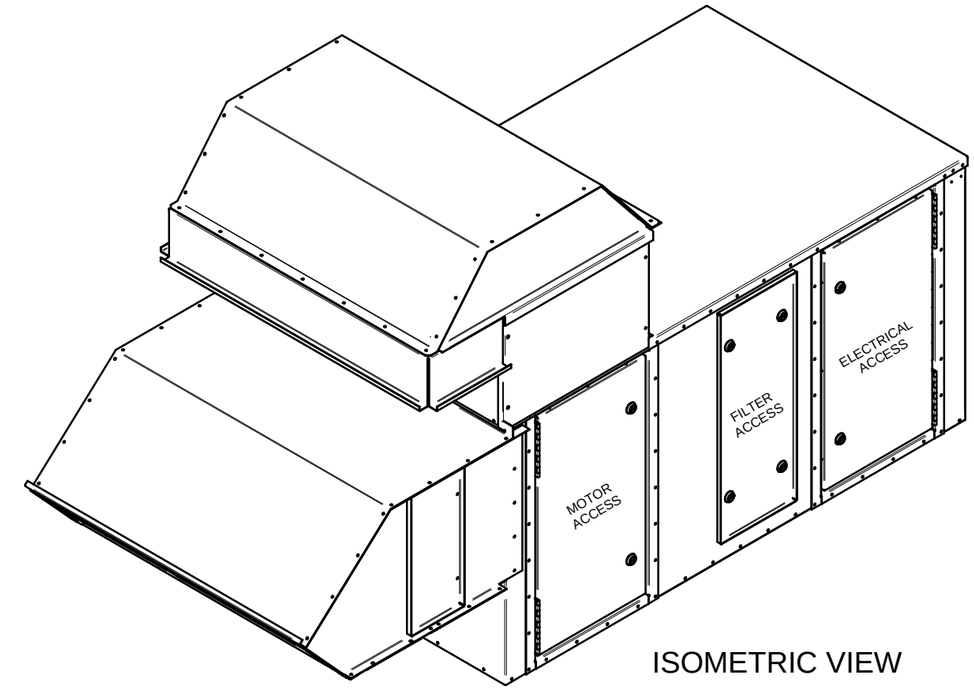

ISOMETRIC VIEW

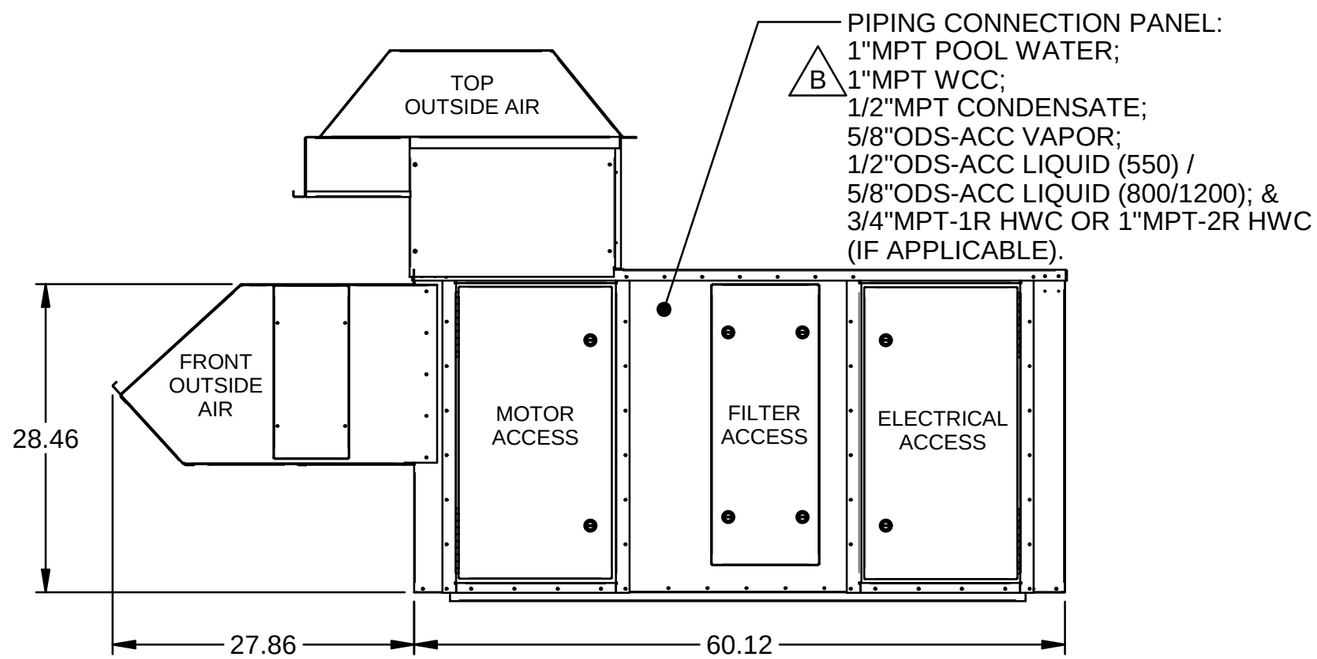

OUTSIDE AIR W/ RAINHOOD - TOP OA (OA-TC) - FRONT OA (OA-FC)

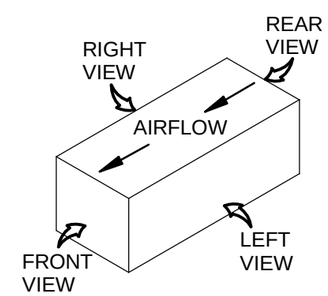

DIMENSIONS ARE IN 'INCHES'
WEIGHTS ARE IN 'POUNDS'

POOLPAK INTERNATIONAL YORK, PA

DESCR: DIAGRAM, AWH/HCDH-550/800/1200 (HORIZONTAL)
R410A
TITLE BLOCK FOR INTERNAL USE ONLY

ESTIMATED WEIGHTS			
	550	800	1200
AWH	480	510	550
HCDH	465	495	535

B

UNIT(S) USED: AWH/HCDH-550/800/1200
FILE: 5600005.dft
DR: dhenry
CHK:
REV. B
PART NO. 560-0005D
DATE: 8/14/2009